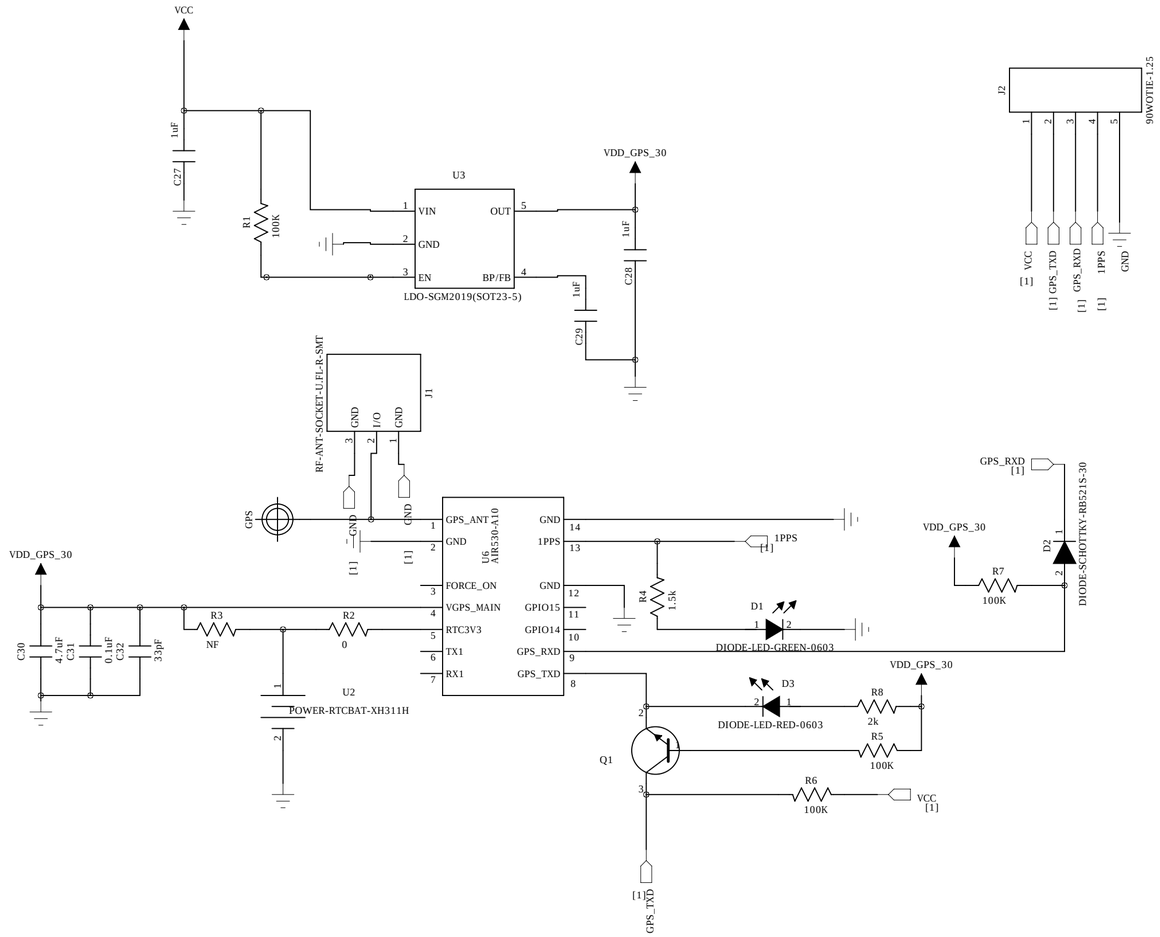

TITLE:	Air530_A10	REV:	1.0
DOCUMENT NO.:	2-INTERFACE	SIZED:	A2
DEPARTMENT:	Hardware DEPT.		
COMPANY:	AirM2M		
DESIGNER: Loukanghua	Last Saved Date: 2019-01-29	SHEET: 1 OF 1	